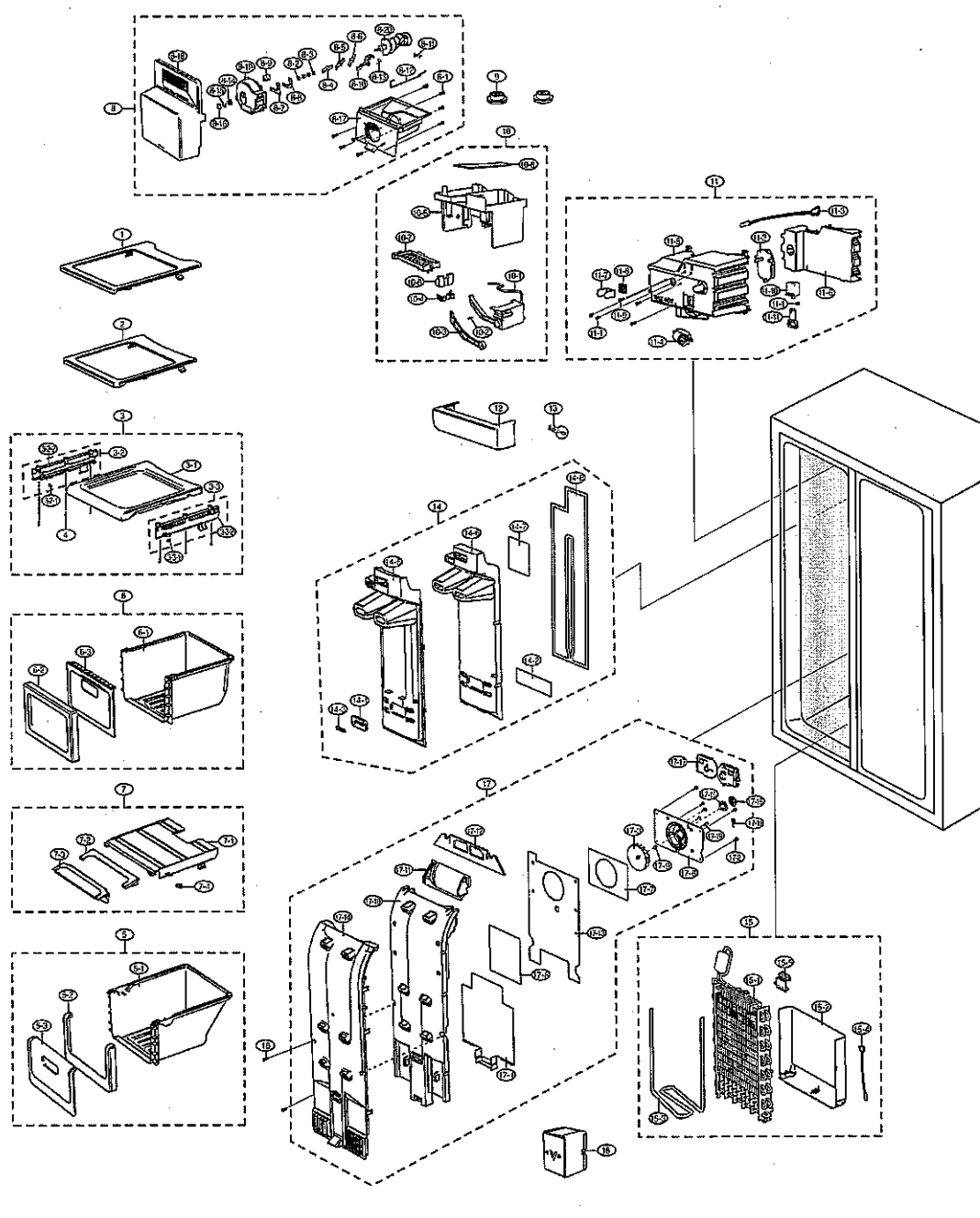
8
9-13
9-10
9-9
9-8
9-6
9-5
9-3
9-4
9-15
9-12
9-11
9-1
9-14
9-16
9-2
9-7
9-17
9
10
10-4
10-5
10-2
10-6
10-7
10-1
10-3
11
11-3
11-5
11-7
11-6
11-9
11-8
11-10
11-1
11-2
1
2
3
3-2
3-1
3-3
3-5
4
3-4
12
13
14
14-6
14-7
14-2
14-1
14-4
14-3
6
6-1
6-3
6-2
7
7-4
7-3
7-2
5
5-1
5-2
5-3
17
17-4
17-5
17-3
17-1
17-10
17-11
17-9
17-8
17-7
16
15
15-4
15-1
15-2
15-3
18

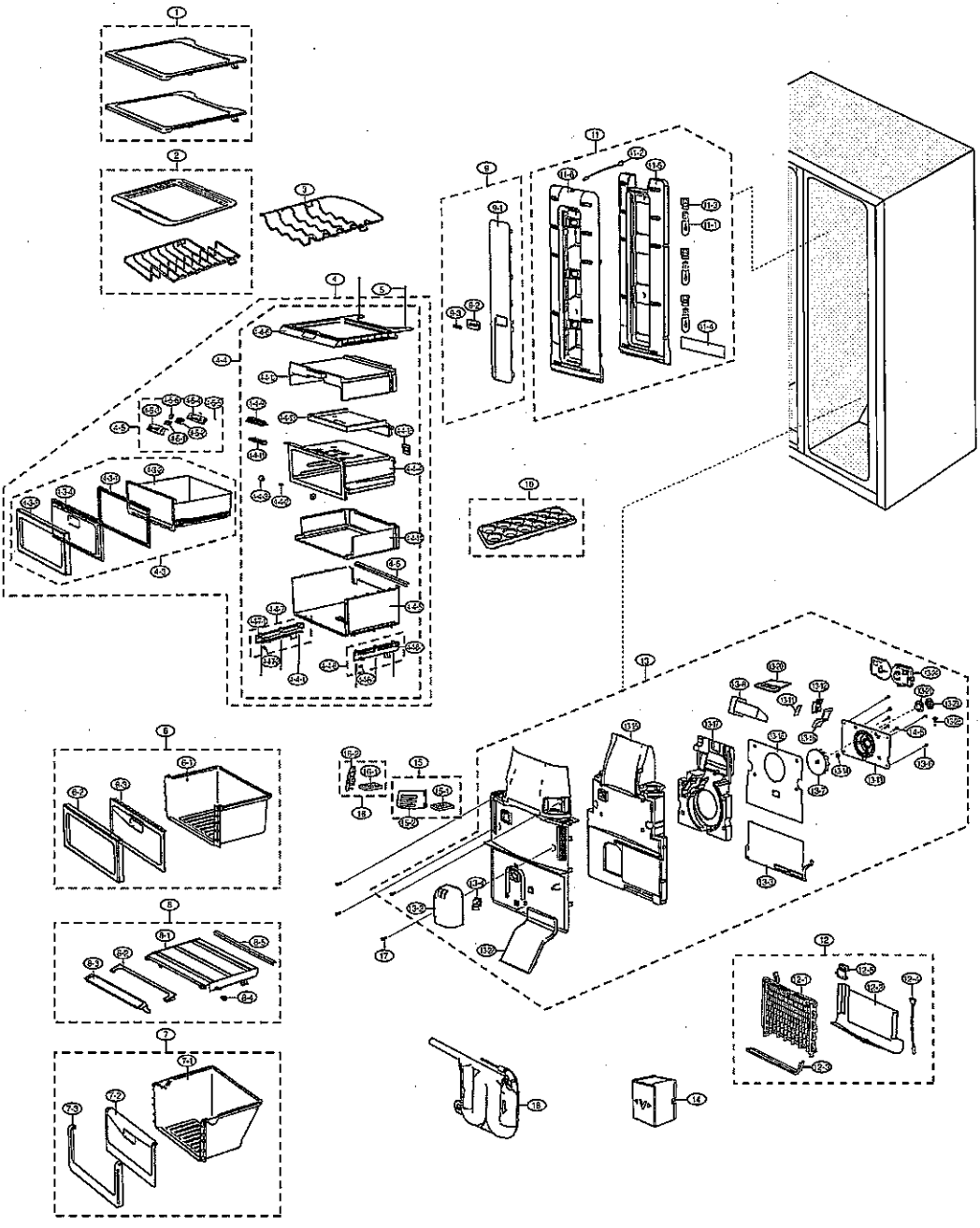

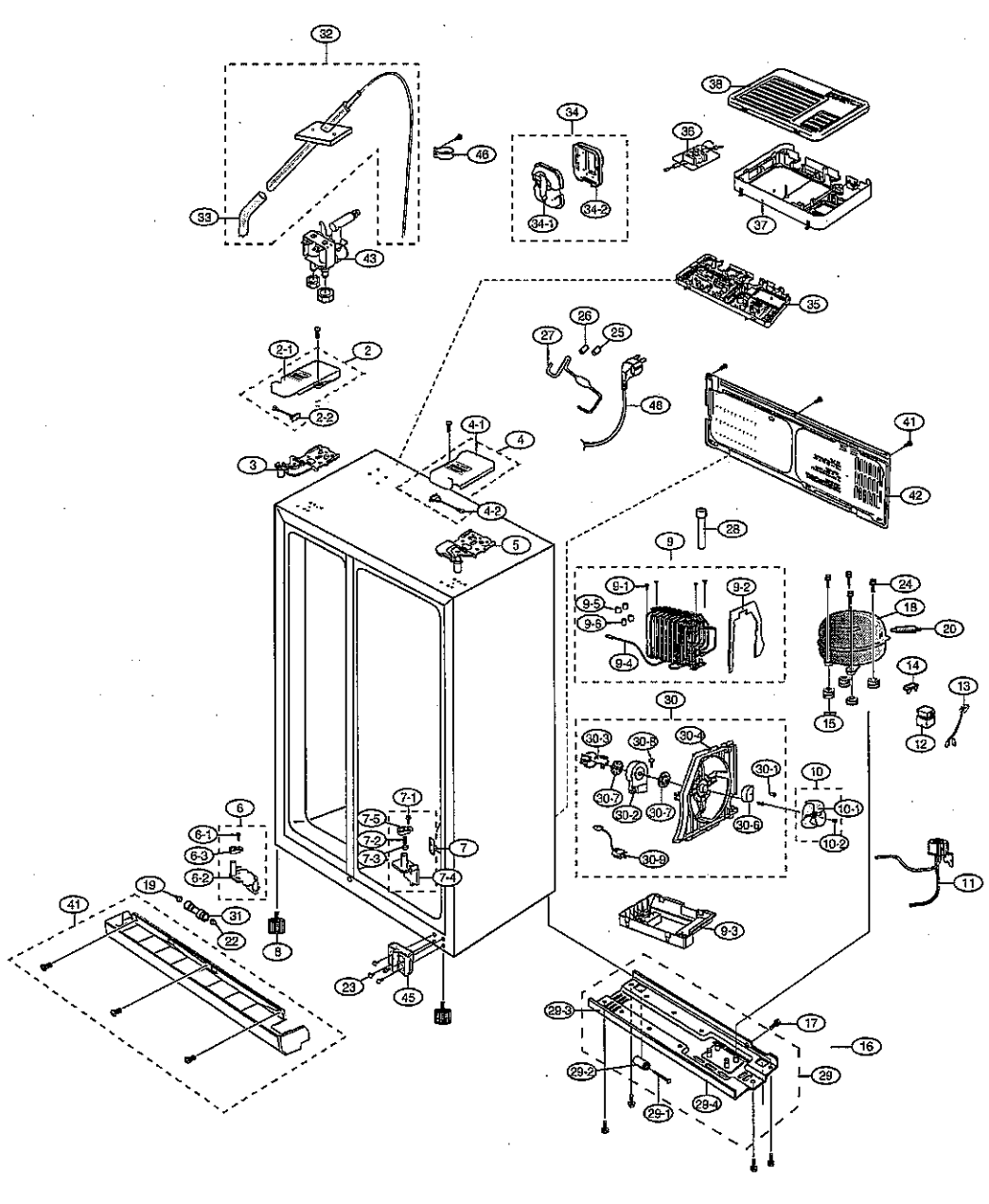
32
33
43
46
34
34-1
34-2
36
38
37
35
26
25
27
48
2-1
2
2-2
4-1
4
3
4-2
5
41
42
9
28
9-1
9-2
9-5
9-6
9-4
24
18
20
14
13
15
12
30
30-3
30-5
30-4
30-1
30-7
30-2
30-7
30-6
30-8
10
10-1
10-2
11
9-3
6
6-1
6-3
6-2
7-1
7-5
7-2
7-3
7
7-4
19
31
22
41
8
23
45
29-3
17
16
29-2
29
29-1
29-4

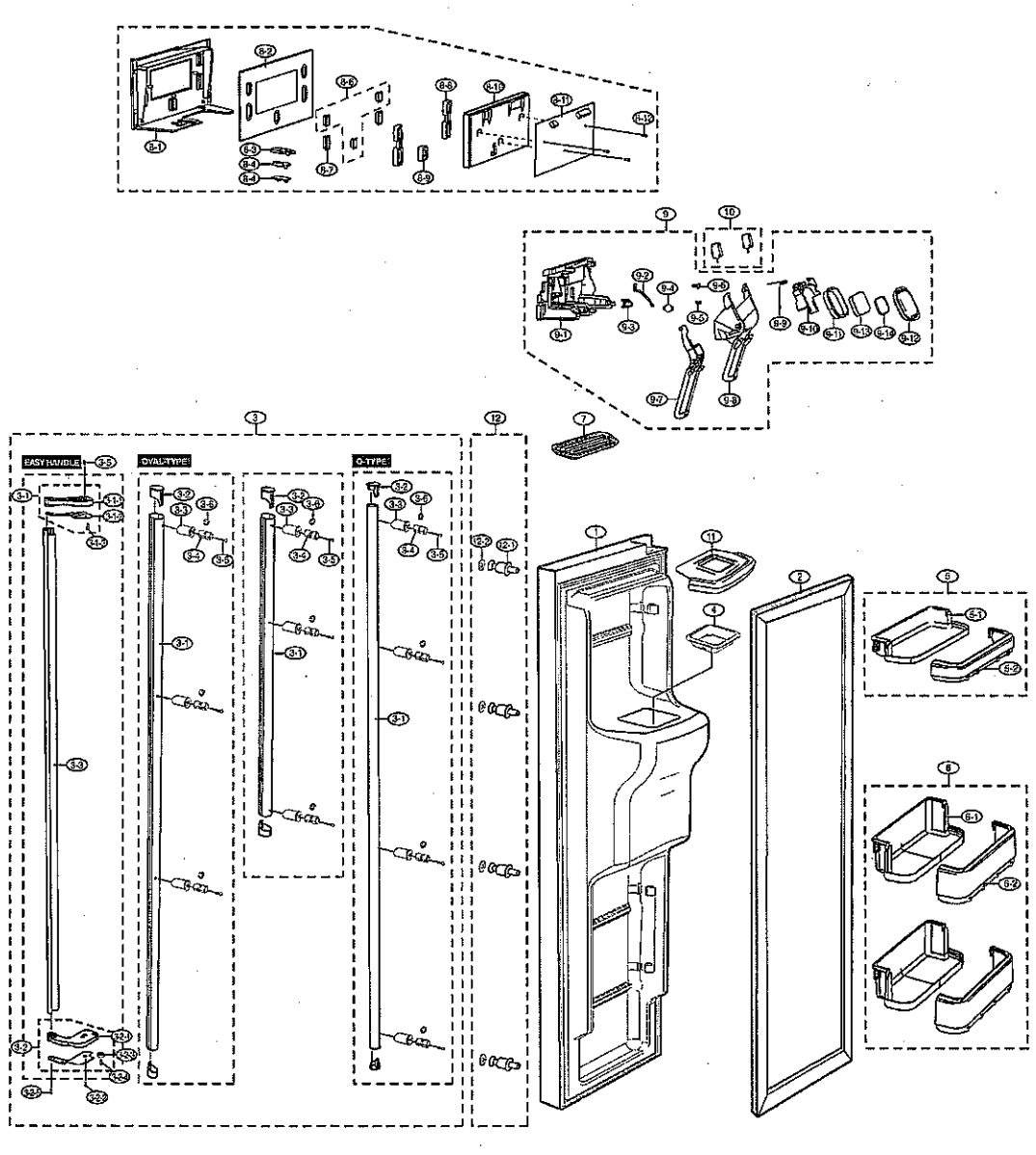
EASY HANDLE
OVAL-TYPE
O-TYPE

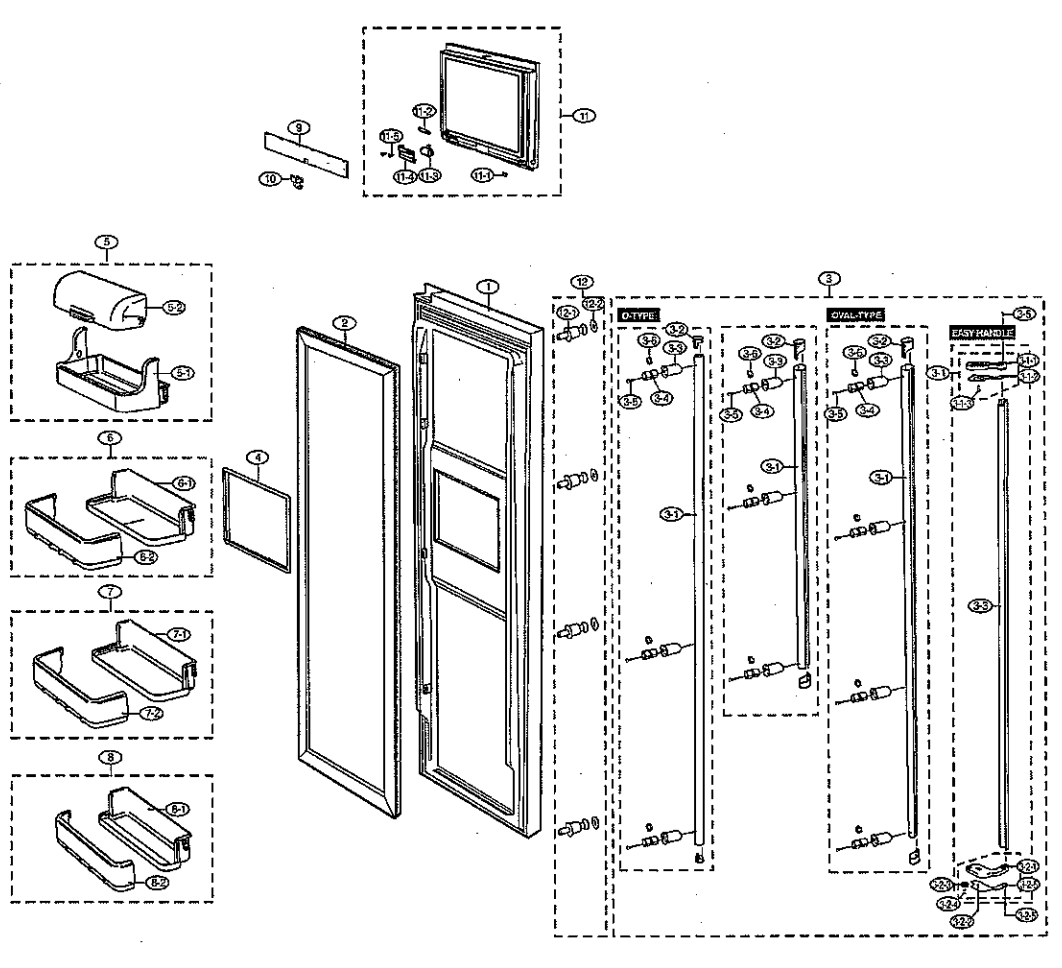
11
11-2
11-5
11-4
11-3
11-1
9
10
5
5-2
5-1
6
6-1
6-2
7
7-1
7-2
8
8-1
8-2
4
2
1
12
12-2
12-1
3
O-TYPE
OVAL-TYPE
EASY HANDLE
3-2
3-6
3-3
3-5
3-4
3-1
2-5
1-1
1-2
1-3
2-3
2-1
2-4
2-2
2-2-1
2-2-2
2-2-3